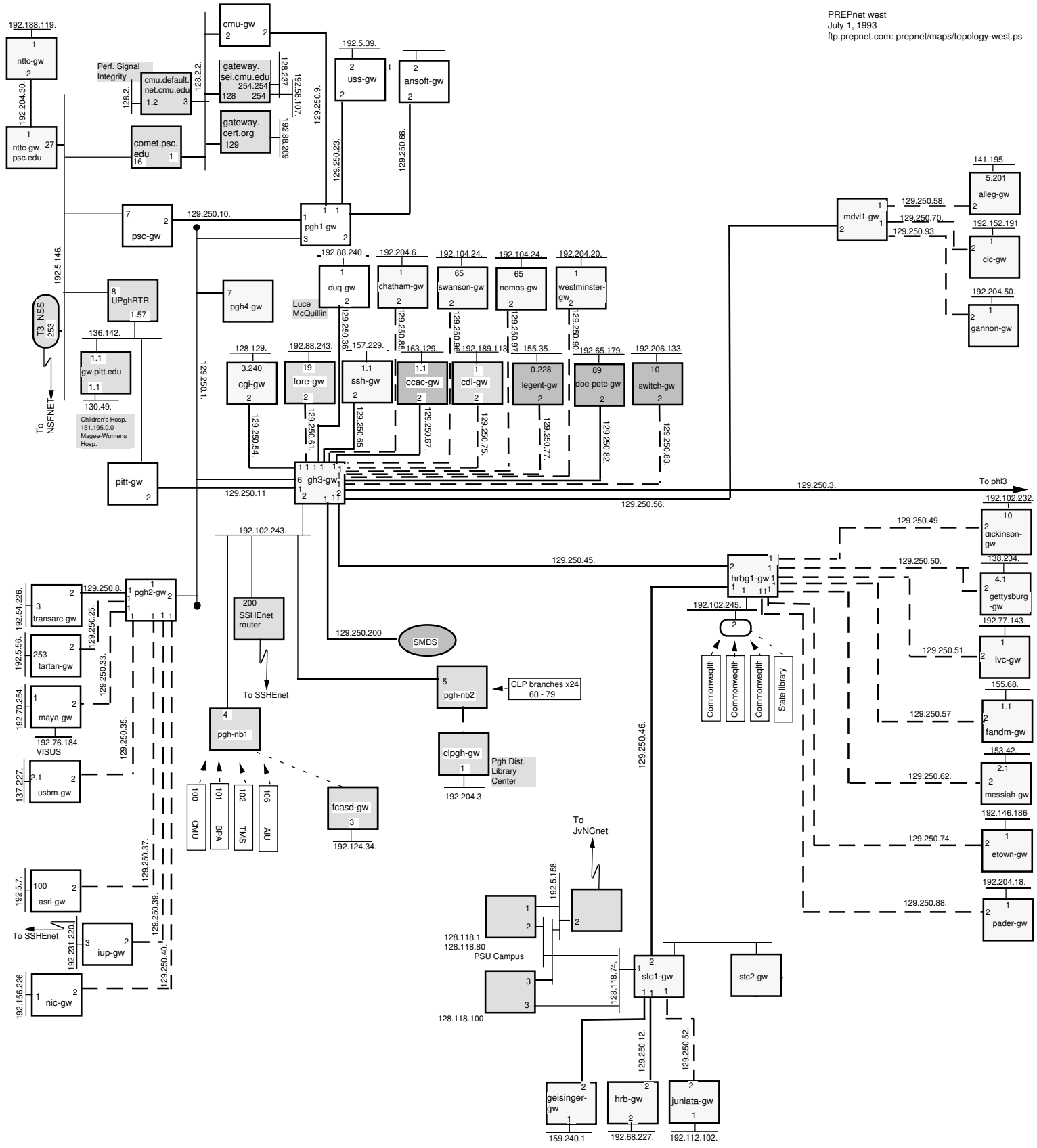PREPnet west
July 1, 1993
ftp.prepnet.com: prepnet/maps/topology-west.ps